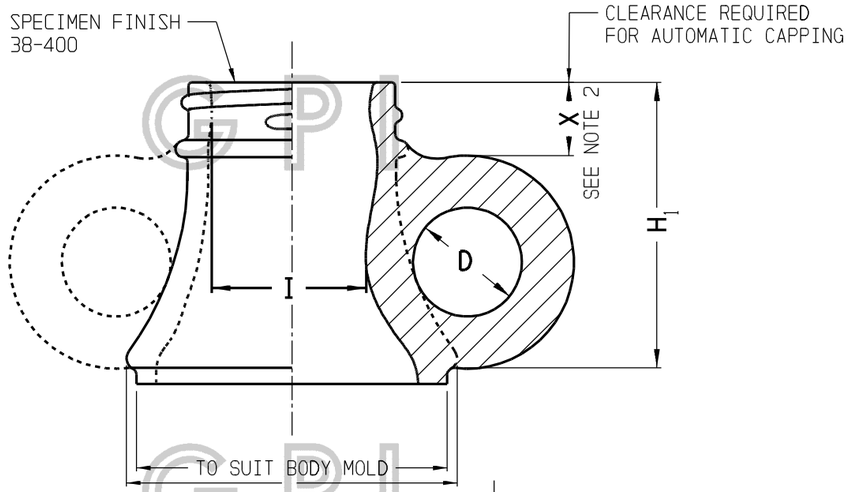

STANDARD TYPE
FIGURE 1

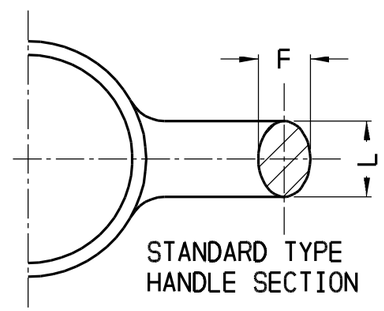

STANDARD TYPE
HANDLE SECTION

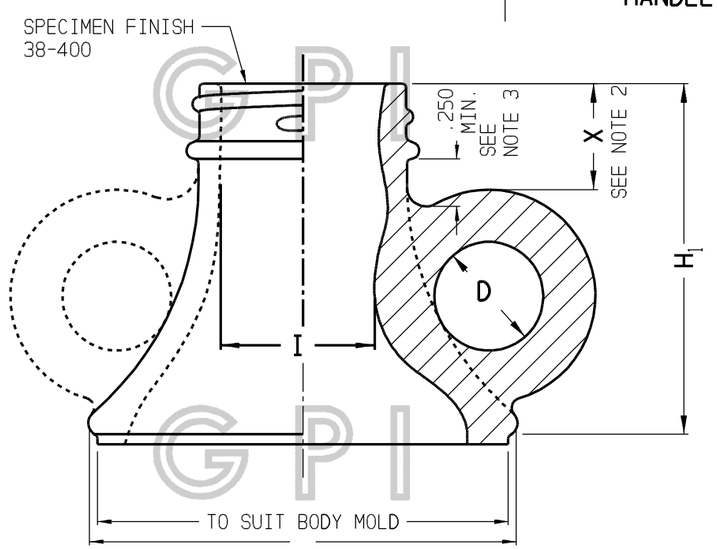

TALL TYPE
(FOR COVER-ALL CAPSULES)
FIGURE 2

GLASS FINISH	SIZE	I MIN.	X MIN.
400	38	0.938	0.469
400	43	1.063	0.469
400	48	1.188	0.469
1705	38	0.938	0.406
2000	38	0.938	0.406
2010	48	1.188	0.406
2060	38	0.938	0.625
2300	40	0.938	0.469

CAP.	TYPE	D	F	H_1	L
$\frac{1}{2}$ GAL.	STD.	0.719	0.344	1.875	0.500
1 GAL.	STD.	0.813	0.406	2.156	0.625
$\frac{1}{2}$ GAL.	TALL	0.719	0.344	2.313	0.500
1 GAL.	TALL	0.813	0.406	2.547	0.625

1. 'I' DIMENSION IS MEASURED THROUGH FULL LENGTH OF FINISH.

2. WHEN A FINISH OTHER THAN THE SPECIMEN FINISH IS USED, THE HEIGHT SPECIFICATION 'H_1' IS ADJUSTED WITHIN THE REQUIREMENTS OF THAT FINISH AND 'MINIMUM X'. OTHER DIMENSIONS ARE SUBJECT TO MODERATE VARIATION DUE TO INDIVIDUAL MANUFACTURERS' PRACTICE.

3. APPLICATION OF COVER-ALL CAPSULE OR SHRINK BAND REQUIRES .250 MINIMUM CLEARANCE BELOW BEAD AS INDICATED IN FIGURE 2.

THIS OFFICIAL GLASS PACKAGING INSTITUTE PRINT CONSTITUTES ONE IN A SERIES OF VOLUNTARY STANDARDS INTENDED TO PROVIDE A BASIS FOR ACHIEVING COMPATABILITY AND INTERCHANGEABILITY BETWEEN MANUFACTURERS AND USERS OF GLASS CONTAINERS AND CLOSURES THEREFOR. THE USER SHOULD BE AWARE THAT OTHER CONTAINER AND CLOSURE DESIGNS MAY DIFFER FROM THIS VOLUNTARY STANDARD, AND IT IS THE USERS'S RESPONSIBILITY TO MAKE THE FINAL DETERMINATION AS TO DESIGN AND COMPATABILITY. GPI ASSUMES NO RESPONSIBILITY FOR EITHER THE USE OF OR INTERPRETATION OF THE STANDARD, FOR IT BEING CURRENT, OR FOR THE DETERMINATION WHETHER ANY PARTICULAR MANUFACTURER'S PRODUCT CONFORMS TO THE STANDARD. THIS DRAWING CONTAINS INFORMATION TAKEN FROM ONE OR MORE PRINTS OF THE GLASS PACKAGING INSTITUTE (GPI). GPI OWNS ALL RIGHT, TITLE AND INTEREST IN THE COPYRIGHTS TO THIS DRAWING AND TO THESE PRINTS. GPI REQUIRES THAT YOU NOT REPRODUCE THIS DRAWING FOR OR DISTRIBUTE THIS DRAWING TO ANY THIRD PARTY WITHOUT GPI'S WRITTEN CONSENT. ANY INQUIRIES OR SUGGESTIONS CONCERNING THIS STANDARD CAN BE ADDRESSED TO THE GLASS PACKAGING INSTITUTE, WASHINGTON D.C. AT WWW.GPI.ORG.
COPYRIGHT © GPI 1972,1999

Edward A. Grant, CHAIRMAN	PRINTED AND DISTRIBUTED AS A VOLUNTARY STANDARD BY GLASS PACKAGING INSTITUTE, COMMITTEE ON DESIGN AND SPECIFICATIONS	APPROVED FOR PUBLICATION 01-15-99	SUPERSEDES DWG. NO. 47
	GLASS FINISH NUMBER 4	GPI DWG. NO. 48	

FINISH REQUIREMENTS FOR HALF GALLON AND GALLON CONTAINERS WITH HANDLES